THIS COPY IS PROVIDED ON A RESTRICTED BASIS AND IS NOT TO BE USED IN ANY WAY DETRIMENTAL TO THE INTERESTS OF PANDUIT CORP.

PANDUIT P/N	WEIGHT
T45TD	1.3 LB/10 PCS (580 g/10 PCS)

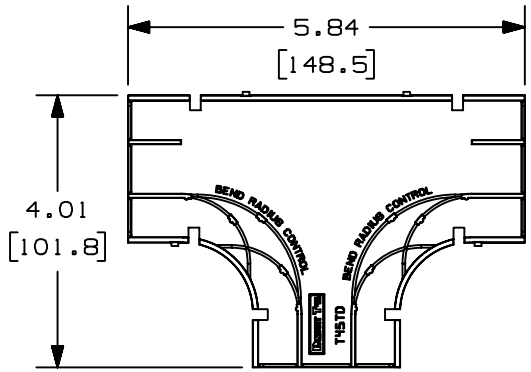

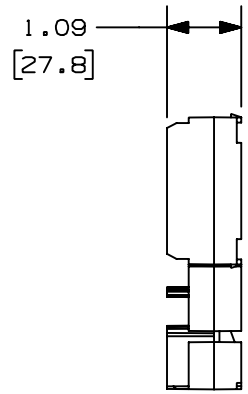

NOTES:
1. SEE CURRENT CATALOG FOR ADDITIONAL PART NUMBER SUFFIXES TO INDICATE COLOR AND/OR PACKAGE QUANTITY.
2. THIS PRODUCT IS INTENDED TO BE USED WITH PANDUIT TYPE T-45 RACEWAY.
3. THIS PRODUCT IS FEATURED WITH A 1" BEND RADIUS.

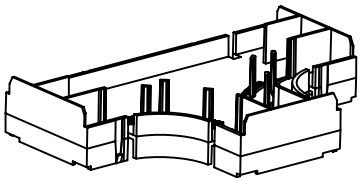

REV	DATE	BY	CHK	DESCRIPTION	ECN	CHK	CUST	SUP
R	11-17-99	RABO	KJF	RELEASED TO PRODUCTION	36975-83	RN	HIW	

CAD FILENAME/LAYERS: D36975EI_DC_T45TI_00A.PRT

PANDUIT CORP. TINLEY PARK, ILLINOIS

T-45 TEE FITTING INSERT
(T45TD)
CUSTOMER DRAWING

UNLESS OTHERWISE SPECIFIED, DIMENSIONAL TOLERANCES ARE:
(.X) ± (.XXX) ±
(.XX) ±.03 (.8) ANGLES ±

UNLESS OTHERWISE SPECIFIED, ALL DIMENSIONS ARE GIVEN IN INCHES, THIRD ANGLE PROJECTION.

DRAWN BY: RABO
DATE: 11-17-99
CHECKED BY: KJF
MAT'L: PVC
SCALE: NONE
DRAWING NO.: 36975-83
DWG SIZE: A